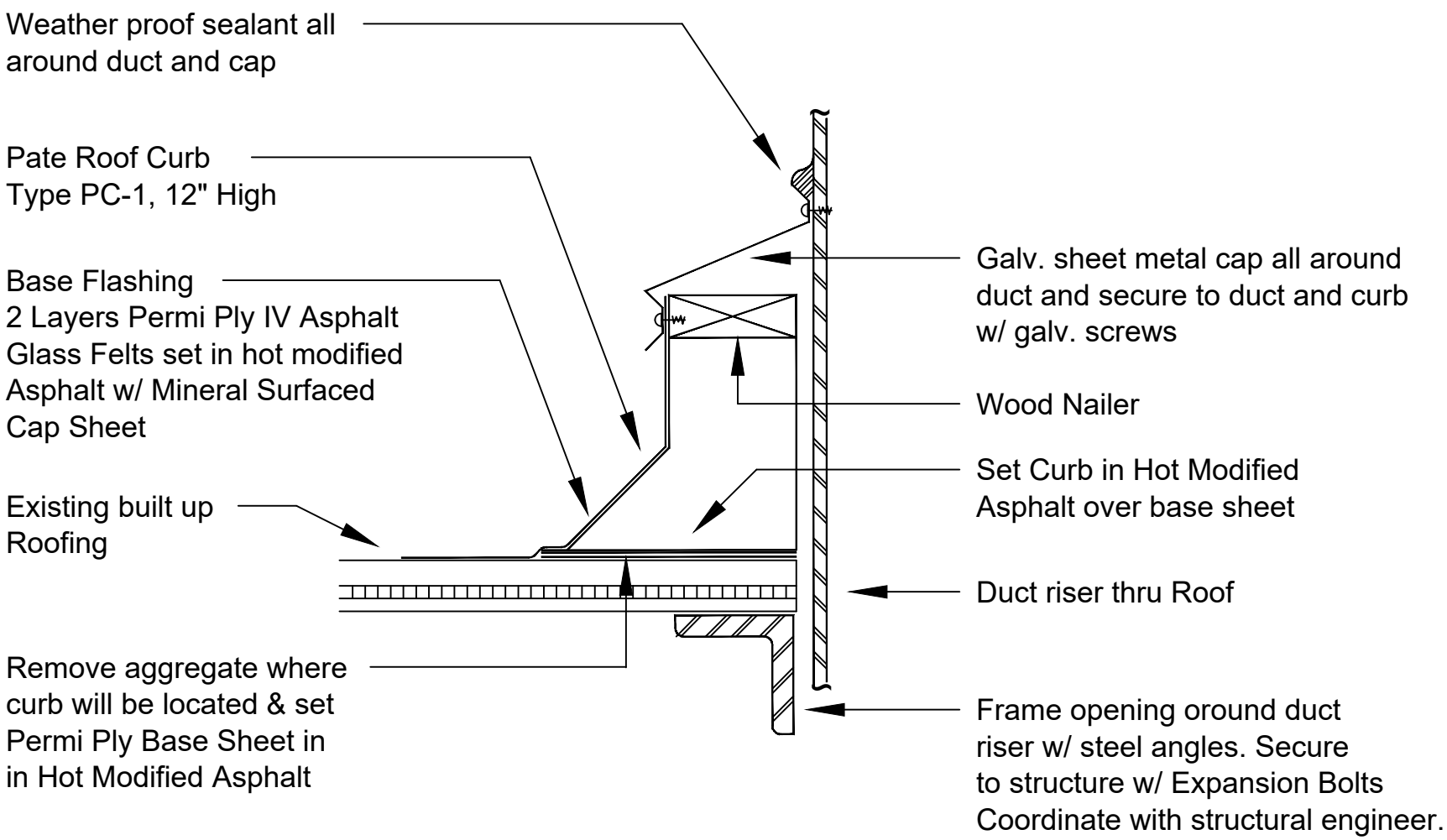

Detail : Roof Curb

No Scale